orluna
air butterfly
origin
IP54
CE

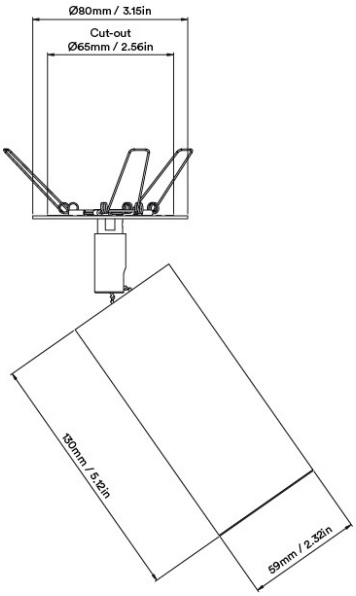
Ø80mm / 3.15in
Cut-out
Ø65mm / 2.56in
130mm / 5.12in
59mm / 2.32in

air butterfly
origin

2700K

		SOFT				SPECIALITY
		Medium	Wide	Flood	Wash	Crisp
LIGHT VALUES	Beam Width FWHM	28°	43°	53°	60°	37°
	Initial Lumens	1164	1164	1164	1164	1164
	Engine Lumens	975	968	935	942	970
	Luminaire Lumens	682	737	721	742	793
	Engine Lm/W	86	85	82	83	85
	Luminiare Cd	1917	1283	961	809	1839
POWER	Voltage	34V				
	Drive Current	300mA				
	Circuit Power (typ)	11.4W				

3000K

		SOFT				SPECIALITY
		Medium	Wide	Flood	Wash	Crisp
LIGHT VALUES	Beam Width FWHM	29°	44°	53°	59°	37°
	Initial Lumens	1252	1252	1252	1252	1252
	Engine Lumens	1013	1026	999	1013	1025
	Luminaire Lumens	715	770	761	767	831
	Engine Lm/W	89	90	88	89	90
	Luminiare Cd	1956	1291	1011	853	1915
POWER	Voltage	34V				
	Drive Current	300mA				
	Circuit Power (typ)	11.4W				

	Binning SDCM (Hot)	2
	CRI (typ)(R9)	98 (99)
	TM30 Rf Rg	Rf 93.8 Rg 101.9
	Lifetime (TM21)	L90 B5 50,000hrs (inc driver)
	Lifetime (Calculated)	L70 426,000hrs
DRIVER	Protocols	Mains Dim / DALI / 0-10V / Non-dim
	Dim to Dark	0.1% Lux
	Distance from LED	20m / 65' (series wiring)
	Emergency	Emergency packs available

11/03/20

SPECIFICATION CODE

Engine type		Bezel		Colour Temp	Driver	Beam Width		Bezel Colour		Baffle Colour		Options
OR	-	AB	-	27	M	M	-	W	-	BB	-	54 K
				27 / 2700K 30 / 3000K 40 / 4000K	**M / Mains Dim** D / DALI 0 / 0-10v N / Non Dim X / No Driver	M / Medium W / Wide F / Flood H / Wash C / Crisp		**W / White RAL 9010** D / White RAL 9003 E / White RAL 9016 B / Black RAL 9005 C / Other RAL G / Polished Brass J / Antique Bronze K / Brushed Chrome L / Polished Chrome I / Polished Copper Z / Other Metallic		**BB / Black 9005** WB / White 9010 DB / White 9003 EB / White 9016 CB / Other RAL MB / Polished Brass JB / Antique Bronze KB / BrushedChrome LB / PolishedChrome IB / Polished Copper ZB / Other Metallic		**54 / IP54** J / Plaster-in plate H / Honeycomb N / Frosted Lens Z / LSZH Cable **K / Click Connector**