S06-06

Part Number JR1006406

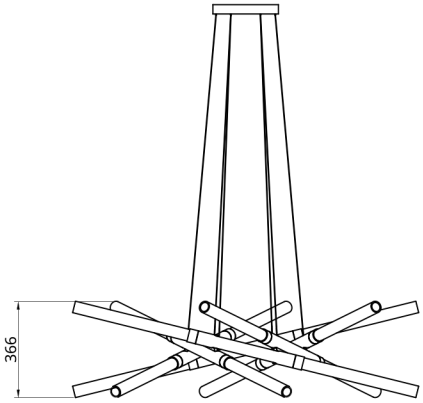

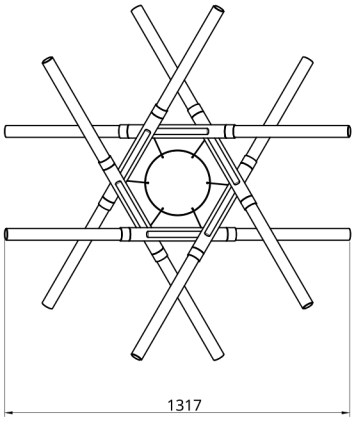

Dimensions	OD	1320mm
	Height	368mm
Weight	Brass	18.5kg
	Aluminium	5.9kg
Light Source	Led Bulbs 3000k Decorative Lighting Only	
Power	Light Wattage	48w
	Driver Wattage	90w
	Voltage	110-130v / 220-240v
	IP20 Rated	
Hanging	We offer a range of hanging options. Including direct attach and fully enclosed ceiling roses. Light supplied with 1500mm / 3000mm / 6000mm length of cable to be hung and cut to desired length on site.	
Driver	Supplied with a dimable 12v LED Driver. Driver can be stored within 8m of the light, in a recess being the ceiling or enclosed within a ceiling rose.	
	Driver Dimensions	180 x 60 x 35mm
	Ceiling Rose Dimensions	250x 35mm

Metal Finish

- Polished Brass
- Brushed Brass
- Burnished Brass
- Black Anodised
- Silver Anodised

Glass Finish

- Frosted